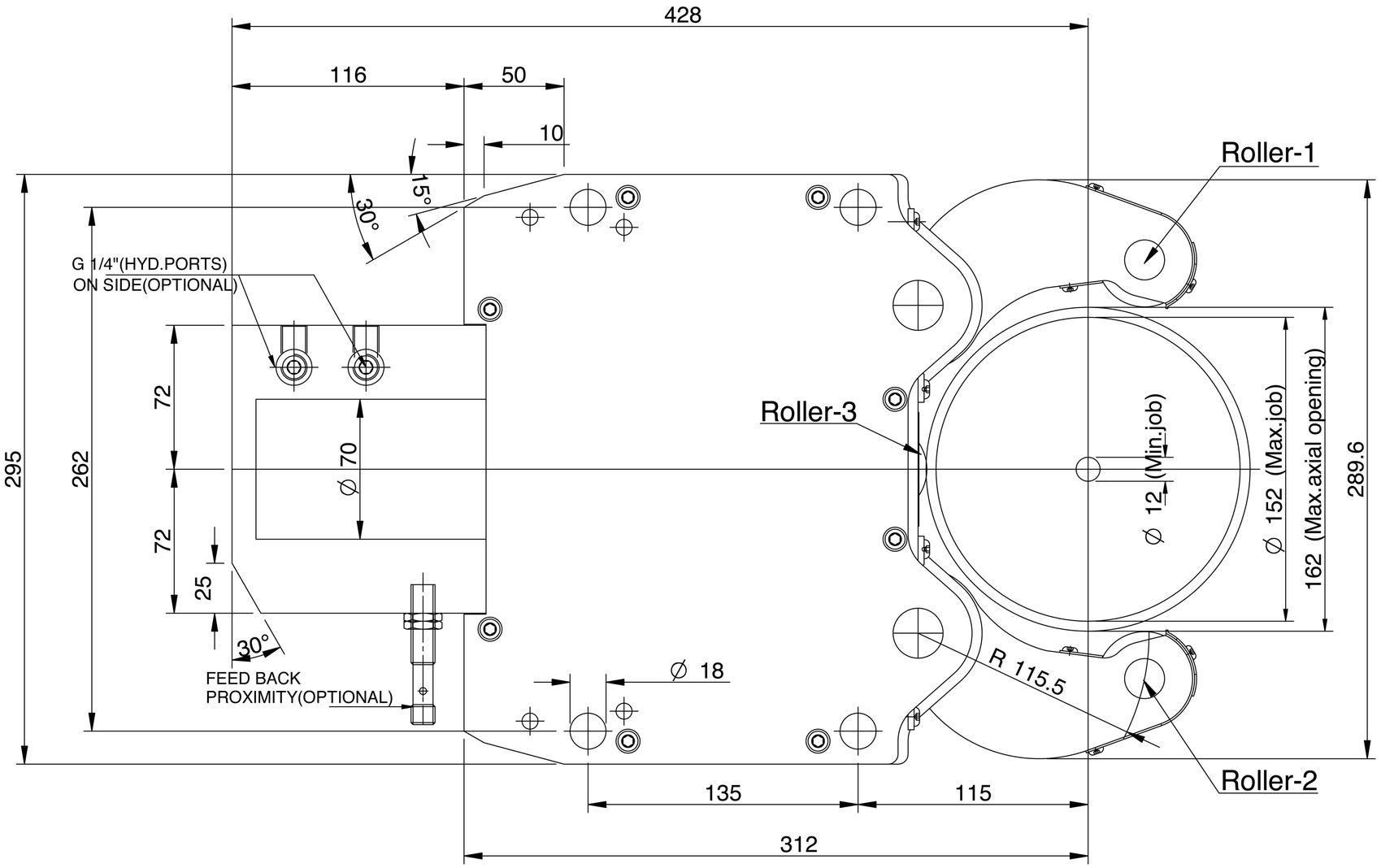

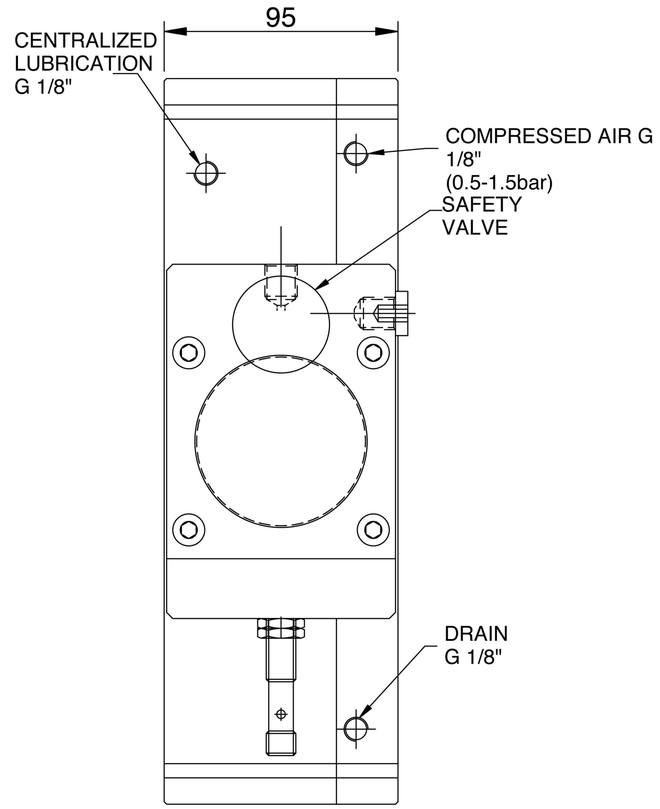

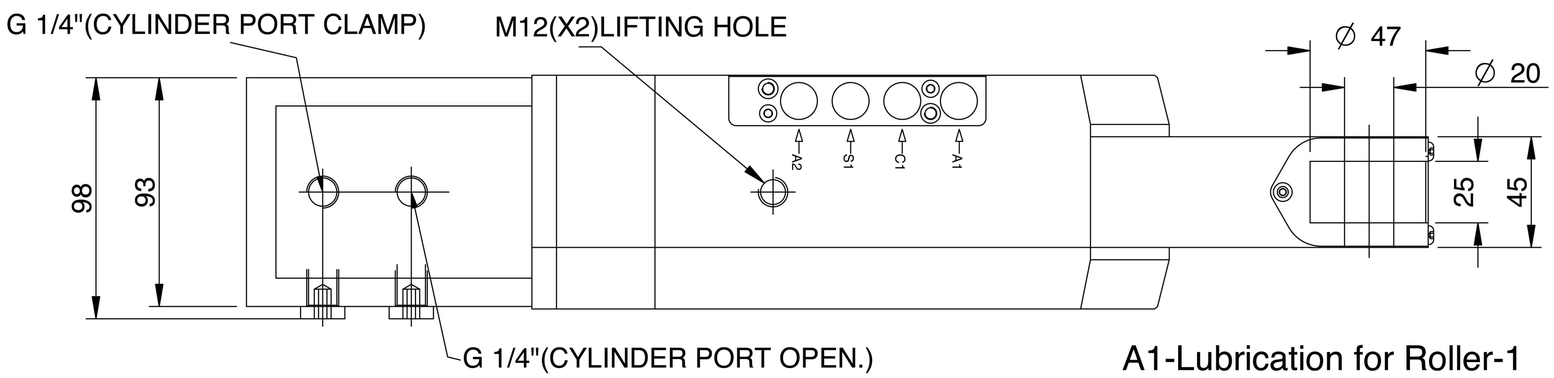

A1-Lubrication for Roller-1
C1-Lubrication for Roller-3
S1-Lubrication for Guide way
A2-Lubrication for Roller-2

SPECIFICATION SHEET		
1.	Steady model	FRU-N3
2.	Centering range dia	12-152mm
3.	Piston dia	70 mm
4.	Operating pressure	8-80 bar
5.	Max clamping force/ roller	1000 dan
6.	Centering accuracy	0.04 mm
7.	Repetability	0.007 mm
8.	Max roller surface speed	725 m/ min
9.	Weight(approx)	48 Kg

IF IN DOUBT ASK.
DO NOT MEASURE DRAWING

Surface finish
Ra value – μm
Roughness No: N1 N2 N3 N4 N5 N6 N7 N8 N9 N10 N11 N12

Heat treatment	Hardness	Case depth

IS 2102-1969
General tolerances where not specified

Linear Dimension		
Over	Upto	Tol.
0.5	6	±0.1
6	30	±0.2
30	120	±0.3
120	315	±0.5
315	1000	±0.8
1000	2000	±1.2

Angular Dimension		
Over	Upto	Tol.
6	10	±1°
10	50	±30'
50	120	±20'
120	400	±10'

Semi product:	Final size:	Material:	Qty:	Weight:	Scale:

Alterations

Advice No	Description	No.of Places	Old No.	Name	Date

Designation: OVERALL LAYOUT

Drawn		30/11/12
Checked		30/11/12
Approved		

kitagawa EUROPE

Drawing No. FRU-N3-05-001A-3

No. of Sheets: Sheet No.